ISO9001 Quality Control System Approval

Communication Expansion Card

Ver.1.5

User Manual

SHENZHEN ENCOM ELECTRIC TECHNOLOGIES CO.,LTD.

Contents

1 Installation instructions for Expansion Card

1.1 The model of Expansion card:

No.	Model	Explanation
1	EN-PRO1	PROFIBUS-DP expansion card (Suitable for 15KW Drive or below power type)
2	EN-PRO2	PROFIBUS-DP expansion card (Suitable for 18.5KW Drive or above power type)
3	EN-CAN1	CANopen expansion card
4	EN-CAN2	CANlink expansion card
5	EN-PRPG01	PROFIBUS-DP and OC input PG Integration expansion card (Suitable for 5.5KW Drive and above power type)

1.2 Installation for Expansion Card

1.2.1 Expansion Card Installation for 15KW Drive and below power type

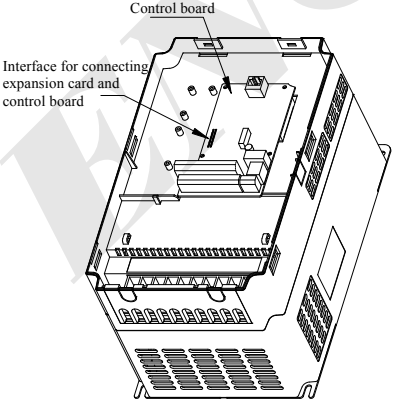

Fig.a

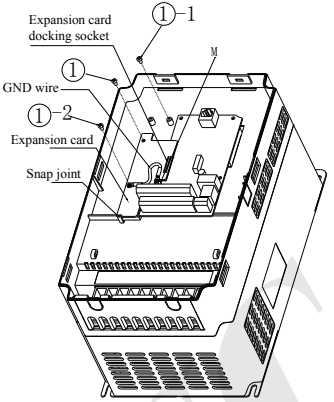

Fig. b

EN-PRO1, EN-PR02, EN-CAN1, EN-CAN2 installation steps：

Step 1: Remove the keypad and terminal cover, then remove the upper cover plate, after that it will be shown as Fig. a;

Step 2: Plug board docking port on expansion card (Tag JP2 or J1) into the interface on control board (Tag: CN2), as Fig b shows；

Step 3: As the “①”shows on Fig. b, please use the PB3*6 tapping screw to fix the expansion card；

Step 4: Place the GND wire between the “Expansion Card Docking Socket” and position "①-2" as shown in Figure b, fix one end of the GND wire with a PB3*6 tapping screw to position "①-2", and the other end is fixed on the M3*13 iron stud (the details show in step 3) by a M3 screw, please pay attention to the direction of the terminal .

Step 5: Users can start to wiring after putting the upper cover plate back; When the wiring is completed, Users can power on the drive after putting the terminal cover and keypad back.

EN-PRPG01 installation steps：

Step 1: Remove the keypad and terminal cover, then remove the upper cover plate, after that it will be shown as Fig. a;

Step 2: Remove the snap joint, then plug board docking port on expansion card (Tag JP2) into the interface on control board (Tag: CN2), then please use PB3*6 tapping screw to fix the two positions which show in the Fig.b “①” and “①-1” ；

Step 3: Remove the M3 screw which fixes on the control board beside the position "Expansion Card Docking Socket" shown in Figure b, and then install an M3*13 iron stud at this position.

Step 4: Place the GND wire between the “Expansion Card Docking Socket” and position "①-2" as shown in Figure b, fix one end of the GND wire with a PB3*6 tapping screw to position "①-2", and the other end is fixed on the M3*13 iron stud (the details show in step 3) by a M3 screw, please pay attention to the direction of the terminal .

Step 5: Users can start to wiring after putting the upper cover plate back; When the wiring is completed, Users can power on the drive after putting the terminal cover and keypad back.

1.2.2 Expansion card installation for 18.5KW and above power type AC Drive

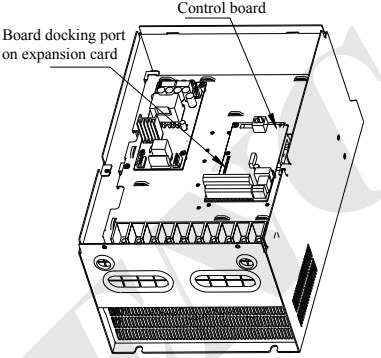

Fig. c

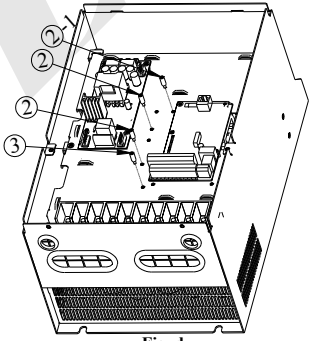

Fig. d

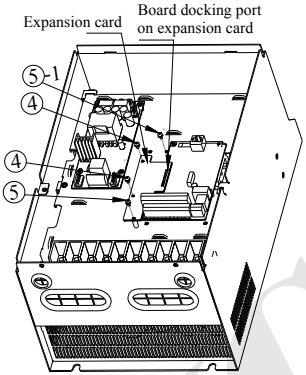

Fig. e

EN-PRO1, EN-PR02, EN-CAN1, EN-CAN2 installation steps：

Step 1: Remove the keypad and terminal cover, then remove the upper cover plate, after that it will be shown as Fig. c;

Step 2: Install M3*13 Iron screw on position“②”of Fig. d; Install M3*13 plastic screw on position“③”of Fig. d;

Step 3: Plug board docking port on expansion card (Tag JP2 or J1) into the interface on control board (Tag: CN2), as Fig. e shows;

Step 4: Install M3*6 combination screw to fix the expansion card on the position“④” of Fig. e; Additionally M3*6 combination screw is needed to fix the EN-PRO1,EN-PRO2 expansion card on the position “⑤” of Fig. e.

Step 5: Users can start to wire after putting the upper cover plate back; Then, Users can turn power on after putting the terminal cover and keypad back.

EN-PRPG01 expansion card installation steps：

Step 1：Remove the keypad and terminal cover, then remove the upper cover plate, after that it will be shown as Fig.c;

Step 2: Install M3*13 Iron screw on position“②”, “②-1”of Fig. d; Install M3*13 plastic screw on position“③”of Fig.d;

Step 3: plug board docking port on expansion card (Tag JP2) into the interface on control board (Tag: CN2)，as Fig. e shows；

Step 4: Install M3*6 combination screw to fix the expansion card on the position “④”, “⑤-1” of Fig.e;

Step 5: Users can start to wire after putting the upper cover plate back; Then, Users can turn power on after putting the terminal cover and keypad back.

1.2.3 Screw explanation during installation

Code	Name	Spec.	Nos	Pic.
① ①-1 ①-2	Tapping screw	PB3*6	3PCS	
② ②-1	Iron screw	M3*13	3PCS	
③	Plastic screw	M3*13	1PCS	
④	Combination screw	M3*6	2PCS	
⑤ ⑤-1	Combination screw	M3*6	2PCS	

Note

Please make sure the docking port on expansion card and interface on control board are aligned before compacting.

2 CAN BUS

2.1 CAN bus expansion card selection:

Item	Model	Detail	Note
1	EN-CAN1	CANopen expansion card (Terminal Interface)	Optional
2	EN-CAN2	CANlink expansion card	Optional
3	EN-CAN4	CANopen expansion card (Double Ethernet ports)	Optional

2.2 CANopen expansion card

2.2.1 CANopen appearance and terminal definition

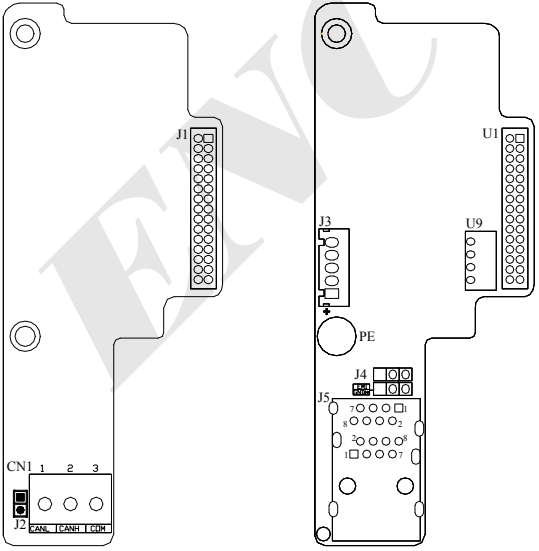

Fig.a EN-CAN1 **Fig.b EN-CAN4**

Fig. 2-1 Appearance view

Table 2-1 EN-CAN1 Terminal function explanation

Terminal	Name	Description	Note
CN1	Communication wiring terminal	Connect this terminal with CAN bus interface	
J1	Signal docking pin	Connect J1 with CN2 on the control board	
J2	Terminal resistor interface	Short circuit the J2, then the terminal resistor will be connected with BUS.	

Table 2-2 EN-CAN4 Terminal function explanation

Terminal	Name	Description	Note
J1	Signal docking interface	Connect the plug to CN2 which is on the main control board during the installation.	
J2	Terminal resistor interface	Short circuit the J2, then the terminal resistor will be connected with BUS.	
J4	Suppression selection terminal	Short circuit the J4, then it will be connected to GND.	
J5	Communication wiring terminal	The communication device port of CAN BUS will be connected by the user.	

(1) CN1 terminal definition

Pin	Definition	Pin	Definition
1	Signal, CANL	3	Power ground, COM
2	Signal, CANH	-	-

2.2.2 CANopen protocol layer

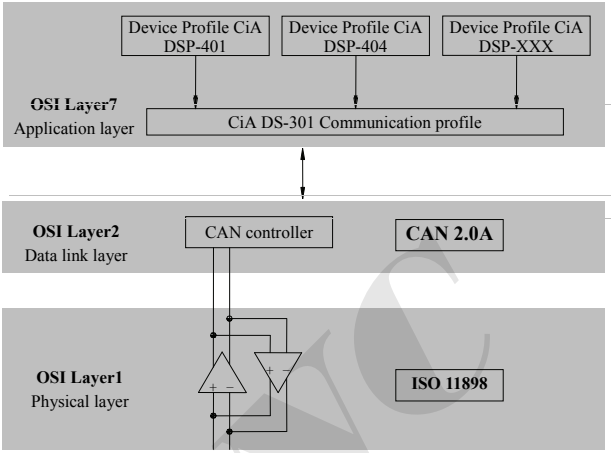

Fig.2-2 Protocol layer

2.2.3 CANopen network connections

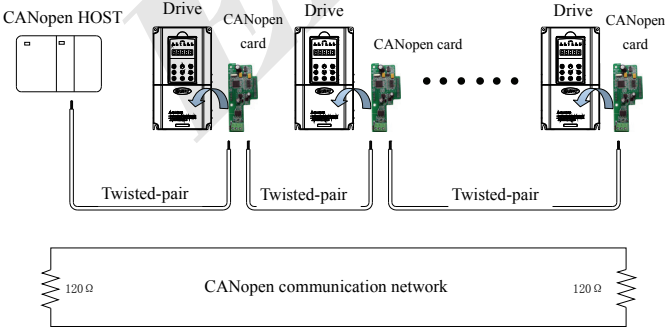

Fig. 2-3

2.2.4 CANopen protocol in different status

Sub-protocol	Initialize	Pre-run	Run	Stop
BootUp	YES	NO	NO	NO
SDO	NO	YES	YES	NO
EMCY	NO	YES	YES	NO
SYNC	NO	YES	YES	NO
Life Guard/ Heart Beat	NO	YES	YES	YES
PDO	NO	NO	YES	NO
LSS	NO	YES	NO	YES

Note

Modify the status of CAN protocol via NMT control.

2.2.5 Definition of CANopen identifier ID

CANopen ID is an assignment table based on 11 bits CAN-ID, it includes 4 bits function code and 7 bits node id, shown as Fig.2-4.

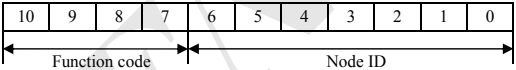

Fig.2-4

2.2.6 CANopen ID assignment table

Table 2-3 CANopen ID assignment table

CANopen pre-defined Host/Slave junction set's radio object			
Object	Function code (ID-bits 10-7)	COB-ID	Communication parameter's index in OD
NMT Module Control	0000	000H	-
SYNC	0001	080H	1005H, 1006H, 1007H
TIME SSTAMP	0010	100H	1012H, 1013H
CANopen Host/Slave junction set's peer object			
Object	Function code (ID-bits 10-7)	COB-ID	Communication parameter's index in OD
EMCY	0001	081H-0FFH	1024H，1015H
PDO1 (Send)	0011	181H-1FFH	1800H
PDO1 (Receive)	0100	201H-27FH	1400H

PDO2 (Send)	0101	281H-2FFH	1801H
PDO2 (Receive)	0110	301H-37FH	1401H
PDO3 (Send)	0111	381H-3FFH	1802H
PDO3 (Receive)	1000	401H-47FH	1402H
PDO4 (Send)	1001	481H-4FFH	1803H
PDO4 (Receive)	1010	501H-57FH	1403H
SDO (Send/Server)	1011	581H-5FFH	1200H
SDO (Receive /Client)	1100	601H-67FH	1200H
NMT Error Control	1110	701H-77FH	1016H-1017H

For radio object, NMT Module Control's COB-ID is 000H, SYNC's COB-ID is 080H.

For host/slave peer object, the definition of COB-ID is as following:

Send PDO1: 180H+NodeID

Send PDO2: 280H+NodeID

Send PDO3: 380H+NodeID

Send PDO4: 480H+NodeID

Receive PDO1: 200H+NodeID

Receive PDO2: 300H+NodeID

Receive PDO3: 400H+NodeID

Receive PDO4: 500H+NodeID

Send SDO: 580H+NodeID

Receive SDO: 600H+NodeID

NMT node error control: 700H+NodeID

NodeID's range is [1,127]

2.2.7 Object dictionary

Using object dictionary to describe the equipment function is the core part for CANopen standard. Object dictionary includes 2 parts, the first part consists of basic equipment information such as equipment ID, manufacturer, communication parameter and so on. The second part is to describe the special functions of equipment.

Object dictionary uses a 16-bytes index and a 8-bytes child index to achieve the "address searching", CANopen equipment' function and character is described by electric data sheet(EDS).

For example:

```
MainIndexTable[5] =
{
        SubIndexA,
        SubIndexB,
        SubIndexC,
        SubIndexD,
        SubIndexE
```

}
SubIndex
{
u8 Access Type;//Read the authority of user dictionary
us8 Data Type;//data type
us2 size;//data size
void* pObject; //directing to object dictionary's detailed object
}
SubIndexA, SubIndexB, SubIndexC, SubIndexD, SubIndexE is SubIndex's instantiation. For example if we want to know the read-access authority of SubIndexE, we can use prime index 4 and child index 4 to find out the read-access authority.

2.2.8 CANopen protocol

CANopen protocol includes of SDO, PDO, NMT, BootUp, SYNC, EMCY, LSS, Heartbeat or Node Guard. Please note that Heartbeat and Node Guard can't be used at the same time.

2.2.8.1 NMT control

The message format will be:
NMT-Master----->NMT-Slave(s)

COB-ID	Byte0	Byte1
0x0000	CS	Node-ID

When Node-ID=0, all of NMT slave equipment will be searched, CS is command word，its value can be as following:

Command word	NMT service
01H	Start remote node
02H	Stop remote node
80H	Enter pre-operate status
81H	Reset the node
82H	Reset communication

For example, now we need to stop remote node 5, there is no need for slave station to respond, the host station sends:
0000H, 02H, 05H
To search present status by 601 2B 0C 10 00 C8 00 00 00, 601 2F 0D 10 00 03 00 00 00
Stop present searching by 601 2F 0D 10 00 00 00 00 00

2.2.8.2 Node Guard

Through Node Guard service, NMT host node sends remote frame to search the present status for every node in every setting time (Decide by 100CH and 100DH). In addition, a overturn byte will also be sent to distinguish present status and history status. The micro controller should change the value of overturn byte between 2 times of searching. Object dictionary's index 100CH protecting time decides the time interval (ms) between two times of searching, index 100DH includes of life factor, the product of this coefficient and protecting time is the latest limit time for the host to search equipment status.

NMT-Master node send remote frame (No data)
NMT-Master----->NMT-Slave

COB-ID
0x700+Node-ID

NMT-Slave node will respond as following
NMT-Master<-----NMT-Slave

COB-ID	Byte0
0x700+Node ID	Bit7: Overturn Bit6-0: Status

Bit6-0's value will be as following:

Value	status
0	Initializing
1	Disconnecting
2	Connecting
3	Preparing
4	Stopped
5	Operational
127	Pre-operational

For example, remote slave station is under operable status after searching the present status of node 5
Master station send remote frame:
705H (Remote frame, no data)
Slave station response：
705H, 05H (or 85H)

Heartbeat:

Through periodicity (Index is 1017H) heartbeat message equipment to send present status, status details are as following table 2-4.

Table 2-4

Value	Status

0	Initializing
1	Disconnecting
2	Connecting
3	Preparing
4	Stopped
5	Operational
127	Pre-operational

Example: Node can send present status in every 100ms, it can set the slave station via SDO, if present node ID is 5, the data frame will be:
605H, 2BH, 17H, 10H, 00H, 64H, 00H, 00H, 00H
If the setting is right, the slave station will respond:
585H, 60H, 17H, 10H, 00H, 00H, 00H, 00H, 00H
Then node will send its present status in every 100ms.
If user wants to stop reporting present status, just set Heartbeat to 0.
It means that master station will send: 605H, 2BH, 17H, 10H, 00H, 00H, 00H, 00H, 00H
Slave response: 585H, 60H, 17H, 10H, 00H, 00H, 00H, 00H, 00H

2.2.8.3 Boot-UP

NMT-Slave node issues Boot-UP notification message to NMT-Master node that it has entered Pre-operational status from Initialized status.

COB-ID	Byte0
0x700+NodeID	0

After power on, if the present node ID is 5, slave station will send:
705H, 00H

2.2.8.4 SDO:

SDO is used to visit object dictionary of an equipment. Visitor is called as client, CANopen equipment is called as server, a request from client must be accompanied with a response from server.

SDO has 2 kinds of transfer mechanism:

(1) Accelerating transfer: It can transfer 4 bits data at most

(2) Segmented transfer: Length of data transferring is more than 4 bits

We adopt the first method, SDO's accelerating transfer structure is:

Byte0	Byte1-2	Byte3	Byte4-7
SDO command	Object index	Object child index	data

SDO protocol includes SDO upload protocol and SDO download protocol：

Read=upload protocol

Write=download protocol

Host node reads slave node

Data length = 1byte

The Client request:

COB-ID	Byte0	Byte1-2	Byte3	Byte4	Byte5	Byte6	Byte7
0x600+ Server NodeID	0x2F	Index	Sub Index	D0	0	0	0

Data length = 2 bytes

The Client request:

COB-ID	Byte0	Byte1-2	Byte3	Byte4	Byte5	Byte6	Byte7
0x600+ Server NodeID	0x2B	Index	Sub Index	D0	D1	0	0

Data length = 3 bytes

The Client request:

COB-ID	Byte0	Byte1-2	Byte3	Byte4	Byte5	Byte6	Byte7
0x600+ Server NodeID	0x27	Index	Sub Index	D0	D1	D2	0

Data length = 4bytes

The Client request:

COB-ID	Byte0	Byte1-2	Byte3	Byte4	Byte5	Byte6	Byte7
0x600+ Server NodeID	0x23	Index	Sub Index	D0	D1	D2	D3

The Server responds (If success)

COB-ID	Byte0	Byte1-2	Byte3	Byte4	Byte5	Byte6	Byte7
0x580+ Server NodeID	0x60	Index	Sub Index	0	0	0	0

The Server responds (If fail)

COB-ID	Byte0	Byte1-2	Byte3	Byte4	Byte5	Byte6	Byte7
0x580+ Server NodeID	0x80	Index	Sub Index	SDO abort code error			

Host node reads slave node

The client request:

COB-ID	Byte0	Byte1-2	Byte3	Byte4	Byte5	Byte6	Byte7
0x600+ Server NodeID	0x40	Index	Sub Index	0	0	0	0

The Server responds (If success) Data length = 1byte

COB-ID	Byte0	Byte1-2	Byte3	Byte4	Byte5	Byte6	Byte7
0x580+ Server NodeID	0x4F	Index	Sub Index	D0	0	0	0

The Server responds (If success) Data length = 2bytes

COB-ID	Byte0	Byte1-2	Byte3	Byte4	Byte5	Byte6	Byte7
0x580+ Server NodeID	0x4B	Index	Sub Index	D0	D1	0	0

The Server responds (If success) Data length = 3bytes

COB-ID	Byte0	Byte1-2	Byte3	Byte4	Byte5	Byte6	Byte7
0x580+ Server NodeID	0x47	Index	Sub Index	D0	D1	D2	0

The Server responds (If success) Data length =4bytes

COB-ID	Byte0	Byte1-2	Byte3	Byte4	Byte5	Byte6	Byte7
0x580+ Server NodeID	0x43	Index	Sub Index	D0	D1	D2	D3

The Server responds(if failure)

COB-ID	Byte0	Byte1-2	Byte3	Byte4	Byte5	Byte6	Byte7
0x580+ Server NodeID	0x80	Index	Sub Index	SDO abort code error			

Abort code (Hexa)

0503 0000 Toggle bit not alternated
0504 0000 SDO protocol timed out
0504 0001 Client/server command specifier not valid or unknown
0504 0002 Invalid block size (block mode only)
0504 0003 Invalid sequence number (block mode only)
0504 0004 CRC error (block mode only)
0504 0005 Out of memory
0601 0000 Unsupported access to an object
0601 0001 Attempt to read a write only object
0601 0002 Attempt to write a read only object
0602 0000 Object does not exist in the object dictionary
0604 0041 Object cannot be mapped to the PDO
0604 0042 The number and length of the objects to be mapped would exceed PDO length
0604 0043 General parameter incompatibility reason
0604 0047 General internal incompatibility in the device
0606 0000 Access failed due to a hardware error
0607 0010 Data type does not match, length of service parameter does not match
0607 0012 Data type does not match, length of service parameter too hight
0607 0013 Data type does not match, length of service parameter too low
0609 0011 Sub-index does not exist
0609 0030 Value range of parameter exceeded(only for write access)
0609 0031 Value of parameter written too hight

0609 0032 Value of parameter written too low
0609 0036 Maximum value is less than minimum value
0800 0000 General error
0800 0020 Data cannot be transferred or stored to the application
0800 0021 Data cannot be transferred or stored to the application because of local control
0800 0022 Data cannot be transferred or stored to the application because of the present device state
0800 0023 Object dictionary dynamic generation fails or no object dictionary is present

2.2.8.5 PDO:

PDO is used to transmit real-time data from one producer to one or multiple consumers. It does not have a fixed format, and the data transfer speed is limited to 1~8 bites.

Each PDO is described by 2 objects in the dictionary:

(1) PDO communication parameter: It contains that which COB-ID will be used by PDO, transmission type, and the period of ban time timer.

(2) PDO mapping parameters: It contains a list of objects in the dictionary and these objects' length. Those objects are mapped to the PDO.

PDO have several transmission modes as follow:

(1) Synchronization transmission, it is realized by receiving SYNC objects.

① Non-periodic: It is triggered by remote signal, or triggered by specific event of the object which ruled by the device's sub-protocol.

② Periodic: It is triggered by receiving N (1~240) SYNC messages.

(2) Asynchronous transmission.

① It is triggered by remote frame

② It is triggered by specific event of the object which ruled by the device's sub-protocol.

Table 2-5

Transmission Type	PDO Trigger Condition: B=both needed; O=one or both			PDO Transmission
	SYNC	RTR	Event	
0	B	-	B	Synchronous, Non circular
1-240	O	-	-	Synchronous, Circular
241-251	-	-	-	Reserved
252	B	B	-	Synchronous, after RTR
253	-	O	-	Asynchronous, after RTR
254	-	O	O	Asynchronous, Manufacturer specific event

255	-	O	O	Asynchronous, Device sub-protocol specific event

Note:
① SYNC—Receiving SYNC object.
② RTR—Receiving remote frame
③ Event—such as a numerical change or timer interrupt ect.
④ Transmission Type: 1~240, this number represents the number of SYNC objects between two PDO

Each PDO can define a BAN-TIME which is the minimum interval between two consecutive PDO transmission. BAN-TIME can avoid the situation that low priority data unable to compete for bus due to large amount of high priority data. It is defined by 61 bit unsigned integers, and its unit is 100us.

Each PDO can define a period of time for specific event. If over time, PDO transmission will be triggered (No need trigger bit). Event timer period is defined by 61 bit unsigned integers, and its unit is 1ms.

Each PDO can transmit data up to 8 bytes (64 bits).

PDO's mapping consists of 4 bytes, such as a mapping value: 20001010H. Its meaning is different for TPDO and RPDO.

For TPDO: The main index of reading dictionary is 2000H and sub index is 10H. Reading width is 10H bits which equal to 2 bytes.

For RPDO, The main index of writing dictionary is 2000H and sub index 10H. Writing width is 2 bytes.

2.2.8.6 EMCY

EMCY report is triggered by device's internal serious error, and be sent from related application device to others in highest priority. EMCY is applicable to the error signal of interrupt type, which is made up of 8 bytes. Its format is as follow:

COB-ID	Byte0-1	Byte2	Byte3-7
080H+NodeID	EMCY Error Code	Error register (1001H)	Manufacturer's Specific Error Area

Error codes and their definitions are as follow:

Table 2-6:

Emergency Error code	Code Function Description
00xx	Error Reset or No Error
10xx	Generic Error
20xx	Current
21xx	Current, device input side
22xx	Current, inside the device
23xx	Current, device output side

30xx	Voltage
31xx	Mains voltage
32xx	Voltage inside the device
33xx	Output voltage
40xx	Temperature
41xx	Ambient temperature
42xx	Device temperature
50xx	Device hardware
60xx	Device software
61xx	Internal software
62xx	User software
63xx	Data set
70xx	Additional modules
80xx	Monitoring
81xx	Communication
8110	CAN overrun
8120	Error Passive
8130	Life Guard Error or Heartbeat Error
8140	Recovered from Bus-Off
82xx	Protocol Error
8210	PDO no processed Due to length Error
8220	Length exceed
90xx	External Error
F0xx	Additional functions
FFxx	Device specific

The Error Register is in the device's objet dictionary (index 1001H), its bit definition is as below:

Table 2-7

Bit	Error Type
0	Generic
1	Current
2	Voltage
3	Temperature
4	Communication
5	Device profile specific
6	Reserved(=0)
7	Manufacturer specific

Currently our CANopen card uses manufacture's customized EMCY and general communication EMCY, so its error register value is 0x80, 0x10 or 0x91.

Manufacture error codes are as follows:

EMC_TPDO (Error of sending PDO) FF80H

EMC_RPDO (Error of receiving PDO) FF81H

EMC_LSS_SETID (Error of layer management's setting for station address) FF90H

EMC_LSS_SETBAUDRATE (Error of lay management's setting for baud rate) FF91H

Manufacturer specific areas are defined as follows

```
Typedef struct
  {
      UNS16 wIndex;
      UNS8    SubIndex;
      UNS16 SelfDefErr;

  } DEVICE_ERR;
```

Byte 3- byte 4	Byte 5	Byte 6- byte 7
Dictionary master index when the error occurs	Dictionary sub index when the error occurs	Custom code

Custom Code are as below:

```
//SDO
ERR_SDO_READ_TIMEOUT            10H
ERR_SDO_WRITE_TIMEOUT           11H
ERR_SDO_READ                    12H
ERR_SDO_WRTIE                   13H
ERR_SDO_UNKNOW                  14H

//PDO
ERR_PDO_READ_TIMEOUT            20H
ERR_PDO_WRITE_TIMEOUT           21H
ERR_PDO_READ                    22H
ERR_PDO_WRITE                   23H
ERR_PDO_UNKNOW                  24H
//LSS
ERR_LSS_SETID_TIMEOUT           30H
ERR_LSS_SETBAUDRATE_TIMEOUT     31H
ERR_LSS_SETID                   32H
ERR_LSS_SETBAUDRATE             33H
ERR_LSS_UNKNOW                  34H
```

Assuming the current station ID is 3, when RPDO occur writing error (Current dictionary's master index is 3004, sub index is 0), so the slave station will sent message " 83H,81H, FFH,80H,04H,30H,00H,23H,00H"

COB-ID	Byte0-1	Byte2	Byte3-7
080H+NodeID	EMCY Error Code	Error Register（1001H）	Manufacturer specific error area
83H	81H,FFH	80H	04H,30H,00H,23H,00H

Error removal:

When current slave station occur EMCY error, user can choose to remove error automatically or manually. When dictionary index is 4001H, value "1" mean to error removal automatically and slave station will sent out error codes continuously. Value "0" mean to error removal manually. When dictionary index is 4002H, if RPDO write wrongly, master station will remove current errors by sending out message "603H, 2BH, 04H, 30H, 81H, FFH".

2.2.8.7 SYNC

SYNC is used for network synchronization, it is generally sent by the master, the message format is as below:

COB-ID
080H(No Data）

2.2.8.8 LSS

LSS is used to change node's baud rate and COB-ID.

If you use LSS to distribute nodes or changing current baud rate, you must use two addressing modes: Point-to-Point mode and Broadcast mode. LSS protocol is a Master-slave model. One network has only one LSS host which must be implemented in the CANopen manager.LSS slave can be used as one of CANopen devices, also can be used as a part of the CANopen protocol stack, which is shown as follow:

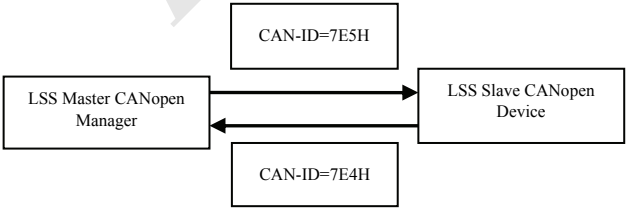

Fig.2-5

LSS protocol only specified two CAN Identifier. LSS host use identifier 7E5H. LSS slave device use 7E4H. The length of the 2 message is always 8 bytes. The first byte is the

command code. Common command codes are as follows:

CODE	FUNCTION
04H	Enter LSS waiting status
11H	Configure new node ID
13H	Configure new bit rate
15H	Enable new bit rate
17H	Save LSS configuration

LSS baud rate parameters for CANopen are as follows:

CODE	FUNCTION
00H	1000K
01H	800K
02H	500K
03H	250K
04H	125K
05H	100K
06H	50K
07H	20K

If there is only one LSS slave device in the network, the user need configure the device accord to “switch state global” protocol. Slave device only can set node ID and baud rate in LSS configuration mode.

If the current node ID=1, baud rate =100K,

CHANGE ID

(1) Slave station enters to configuration mode.

Master station sends message “7E5H, 04H, 01H”, Slave station has no message return back.

(2) Configure slave station’s node.

If set “2”, Master station will send message “7E5H, 11H, 02H”,

Slave station return “7E4H, 11H, 00H, 00H, 00H, 00H, 00H, 00H, 00H”

(3) Restart communication. Master station send message

“00H, 82H, 00H”, slave device return “702H, 00H”

CHANGE BAUD RATE

(1) Slave station enters to configuration mode.

Master station sent message “7E5H, 4H, 01H”,

Slave station does not return message.

(2) Configure node baud. If current baud rate is 500k,

Master station sent message “7E5H, 13H, 00H, 02H”,

Slave station return message “7E4H, 13H, 00H, 00H, 00H, 00H, 00H, 00H, 00H”

(3) Active bit time, let it take effect after 100ms.

Master station send message “7E5H，15H，64H，00H”, Slave station does not return message.

If there are several LSS slave devices in the network, the configuration will be more complex. In order to clearly identify each device, we need use the address which has 4 values. Each value has 32 bit. The four values is supplied by the user dictionary whose index is 1018H.

Switch mode selective protocol between master station and other slave stations is as below:

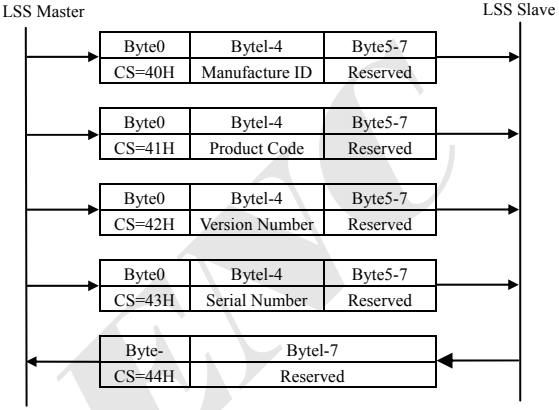

Fig.2-6

Supposing there are currently five nodes. They are in a same CANopen network and their baud rate is 100k. Their vendor ID, product code, version number, serial number are as below:

Table 2-8

Nodes	Vendor ID (HEX)	Product Code (HEX)	Version Number (HEX)	Serial Number (HEX)
1	6D686A79	56353030	56313030	BD62E6FE
18	6D686A79	56353030	56313030	BD22E9FE
40	6D686A79	56353030	56313030	B362E9FE
50	6D686A79	56353030	56313030	7D62E9FE
80	6D686A79	56353030	56313030	BD6259FE

CHANGE NODE ID

For example, Change the ID node from 50 to 2.

(1) The node (ID=50) enter to the configuration mode

Master station send message as follow:

7E5H, 40H, 79H, 6AH, 68H, 6DH

7E5H, 41H, 30H, 30H, 35H, 56H

7E5H, 42H, 30H, 30H, 31H, 56H

7E5H, 43H, FEH, E9H, 62H, 7DH

Slave station return back:

7E4H, 44H, 00H, 00H, 00H, 00H

(2) Set up the node ID as2:

Master send message: 7E5H, 11H, 02H

Slave station return back: 7E4H, 13H, 00H, 00H, 00H, 00H, 00H, 00H, 00H.

(3) Restart communication:

Master station send message: 82H, 00H, 00H

Slave station return back: 702H, 00H

CHANGE BAUD RATE

Mode 1: Change single node's baud rate. For example, if ID=80, now change the node's baud rate from 100k to 250k:

(1) Node (ID=80) enter to configuration mode

Master station sent out:

7E5H, 40H, 79H, 6AH, 68H, 6DH

7E5H, 41H, 30H, 30H, 35H, 56H

7E5H, 42H, 30H, 30H, 31H, 56H

7E5H, 43H, FEH, 59H, 62H, BDH

Slave station return back:

7E4H, 44H, 00H, 00H, 00H, 00H

(2) Configure node's baud rate

Master station sent out: 7E5H, 13H, 00H, 02H

Slave station return back: 7E4H, 13H, 00H, 00H, 00H, 00H, 00H, 00H, 00H

(3) Active bit time, let it will take effect after 100ms.

Master station sent out: 7E5H, 15H, 64H, 00H

Slave station has no message to return

Mode 2: Change all the nodes' baud rate. For example, if current network baud rate is 100K, now change it to 500K:

(1) Slave machine enter to configuration mode.

Master station sent out: 7E5H, 04H, 01H;

Slave station has no message return back.

(2) Configure node's baud rate, such as 500K

Master sent out: 7E5H, 13H, 00H, 02H

Slave station return back: 7E4H, 13H, 00H, 00H, 00H, 00H, 00H, 00H, 00H

(3) Active bit time and let it take effect after 100ms.

Master station send: 7E5H, 15H, 64H, 00H;

Slave station has no message return back.

2.2.9 CANopen Communication Configuration

Function Code	Item	Setting Range
F05.00	Protocol selection	0: Modbus protocol 1: Reserved 2: Profibus-DP protocol (Extendable) 3: CanLink protocol (Extendable) 4: CANopen protocol (Extendable) 5: Free protocol 1 (Can realize all the function parameters modification of EN500/EN600) 6: Free protocol 2 (Can realize part of the function parameters modification of EN500/EN600) Note: Choose 2.3.4 protocol need add extend card
F05.01	Baud rate configuration	Units digit: Modbus protocol Baud rate Tens digit: Profibus-DP Baud rate Hundred digit: CANlink/CANopen Baud rate 0: 20K 1: 50K 2: 100K 3: 125K 4: 250K 5: 500K 6: 1M
F05.03	Local address	1~127

Note

CANopen communication parameter setting step:

(1) Modify F05.02 to select CANopen protocol data format;

(2) Modify F05.03, set the slave address, the slave address range is 1～127;

(3) Modify F05.00 and set the protocol type to 4;

(4) Powered off the Drive to storage the parameters;

(5) Re-power on the Drive, the communication parameter settings will take effect.

Note: Please follow the above steps to modify communication parameters strictly.

2.2.10 CANOPEN Index Definition:

Index 1000H-1A03H is definition of DS301, 2000H-201AH is the functional parameter group defined by manufacturer; 3000H-3017H is the monitoring parameter group defined by manufacturer, 4000H-400H4 is the communication card internal parameter group.

2.2.10.1 Functional parameter group index content:

The functional parameter group F00-F26 corresponding to the main index 2000H-201AH.

For the EN655/EN650B function code communication address, 0x0000~0x1A11 is for EEPROM operation, 0xA000~0xBA11 is for RAM operation. The user can choose read and write data in RAM, or read and write data in EEPROM during the operational process. It should be noted that when the data being written in RAM, if the Drive power-off at the moment, the parameter will not be saved.

2.2.10.2 Monitoring Parameter Index Content:

EN600:

Item	Index	Property	The definition of command data and response
Operational Command	3000H	Read and Write	1: Reserved 2: Reserved 3: Forward jog running 4: Reverse jog running 5: Run 6: Stop 7: Forward running 8: Reverse running 9: Fault reset 10: Reserved
Serial port value setting	3001H	Read and Write	0~10000 (0 is the max value)
Drive Status	3002H	Read Only	BIT0: Bus voltage set up BIT1: Normal running command is valid BIT2: Jog running command is valid BIT3: Running BIT4: The current running direction is reverse BIT5: The direction of operation command is reverse BIT6: Decelerating and Braking BIT7: Accelerating

			BIT8: Decelerating BIT9: Alarm BIT10: Fault BIT11: Current limit BIT12: Fault self-recovery BIT13: Self-tuning BIT14: Free Stop Status BIT15: Speed tracking start up
Alarm Code	3003H	Read Only	0: No Alarm 1~50: The current alarm code
Monitoring parameter 1	3004H	Read Only	C-00 Display Value
Monitoring parameter 2	3005H	Read Only	C-01 Display Value
Monitoring parameter 3	3006H	Read Only	C-02 Display Value
Monitoring parameter 4	3007H	Read Only	C-03 Display Value
Monitoring parameter 5	3008H	Read Only	C-04 Display Value
Monitoring parameter 6	3009H	Read Only	C-05 Display Value
Communication AO1 Index Value	300CH	Read and Write	Range: 0~4000
Communication AO2 Index Value	300DH	Read and Write	Range: 0~4000
Communication AO3 Index Value	300EH	Read and Write	Range: 0~4000
Communication EAO2 Index Value	300FH	Read and Write	Range: 0~4000
Communication HDO Index Value	3010H	Read and Write	Range: 0~4000
Communication EHDO Index Value	3011H	Read and Write	Range: 0~4000
Communication Output Terminal Index value	3012H	Read and Write	BIT0:Y1 BIT1:Y2 BIT2:Y3 BIT3: Y4 BIT4: RLY BIT5: EY1 BIT6: EY2 BIT7: EY3 BIT8: EY4 BIT9: ERLY1 BIT10: ERLY2
Communication Virtual Input Terminal Index value	3013H	Read and Write	BIT0:CX1 … BIT7: CX8

EN650B/EN655:

Item	Index	Property	The definition of command data and response
Operational Command	3000H	Write Only	1: Forward running 2: Reverse running 3: Forward jog running 4: Reverse jog running 5: Free Stop Status 6: Decelerate to stop 7: Fault reset 8~10: Reserved
Serial port value setting	0x3001H	Write Only	-10000~10000 (10000 is the max frequency)
Drive Status	0x3002	Read Only	1: Forward running 2: Reverse running 3: Stop
Alarm Code	0x3003	Read Only	0: No Alarm 1~60: The Current Alarm Code
Communication DO Index Value	0x3004	Write Only	BIT0: DO1 BIT1: DO2 BIT2: DO3 BIT3: DO4 BIT4: REL (Relay)
Communication AO1 Index Value	0x3005	Write Only	0x0000~0x7FFFF: 0%~100%
Communication AO2 Index Value	0x3006	Write Only	0x0000~0x7FFFF: 0%~100%
Communication HDO Index Value	0x3007	Write Only	0x0000~0x7FFFF: 0%~100%
Monitoring parameter 0	0x7000	Read Only	Running Frequency (Hz)
…	…	…	…
Monitoring parameter 78	0x704E	Read Only	Reserved

2.2.10.3 CANOPEN Communication Card Internal Parameter

Item	Index	Property	Definition
Internal Communication Timeout (ms)	4000H	Read and Write	Range: 0-65535. The default value is 1000, it used to set the communication timeout period between the communication card and the drive control board.

Clear the errors automatically / manually	4001H	Read and Write	0: Clear the errors manually 1: Clear the errors automatically When an EMCY error happens in the current slave, you can set to clear the error automatically or manually. The dictionary is 4001H, when it is set to 1, the slave station error will be recovered automatically ; when it is set to 0, the slave station error will be remained until the error is cleared manually. If you need to clear the error code, it must be set by index 4002H.
Error Recovery	4002H	Read and Write	Range: 0-FFFFH. Set the error code which need to be cleared. For example, when the device has an RPDO error in write, the error code is FF81H. For details, please refer to 2.2.8.6 EMCY.

2.3 CANlink Expansion card

2.3.1 CANlink Outline and terminal definitions

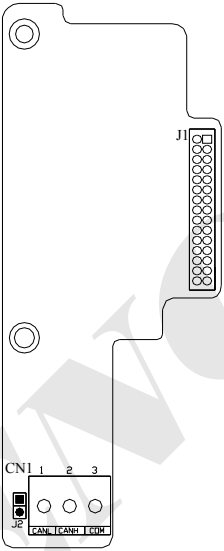

Fig.2-7 Outline dimension drawing

Table2-9 Terminal function definitions

Terminal number	Name	Description	Remark
CN1	Communication terminal	Terminal for CANbus communication devices of customer	
J1	Signal terminal	Connecting to CN2 of control board when installing	
J2	Terminating resistor port	Please short J2 when connecting terminating resistor to CANbus	

(1) CN1Terminal definitions

Pin Number	Definition	Pin Number	Definition
1	Signal CANL	3	Power ground COM
2	Signal CANH	-	-

2.3.2 CANlink protocol

Address mapping:

For example: F00.05 map to 0005H

F10.20 map to 0A14H

Others are by parity of reasoning.

2.3.2.1 CANlink Writing operation

CANlink Writing operation: The frame format sending by master station as show in table.2-10. ID is CAN arbitration logo. CANlink use 29 bits as message identification in CAN extended frame.

Table 2-10

CAN	CANlink	Definition
ID bit28~25	Arbitration logo	Command frame Arbitration logo 1000
ID bit24	Q&A mark	Q&A mark, “1”A frame
ID bit23~16	Command code	Writing register command“0x05”
ID bit15~8	Target address	CANlink target station address
ID bit7~0	Source address	CANlink Site address
DATA1	Data	Writing data high byte
DATA2	Data	Writing data low byte
DATA3	Address	Writing address high byte
DATA4	Address	Writing address low byte

The response data of CANlink slave station shows as table 2-10 when writing operation successful. It returns command code “0x05”and same address and data value with sending.

Writing operation failure; Command code wrong, it returns command code “0xFF”.Wrong writing data ,it returns data value “data value+1”.It returns “address +1”if wrong writing address.

Writing operation returns CANlink frame.

Table 2-11

CAN	CANlink	Description
ID bit28~25	Arbitration logo	Command frame Arbitration logo 1000
ID bit24	Q&A mark	Q&A mark, “1”A frame
ID bit23~16	Command code	Writing register command“0x05”
ID bit15~8	Target address	CANlink target station address
ID bit7~0	Source address	CANlink Site address
DATA1	Data	Writing data high byte
DATA2	Data	Writing data low byte
DATA3	Address	Writing address high byte
DATA4	Address	Writing address low byte

2.3.2.2 CANlink reading operation

CANlink reading operation: The CANlink frame format sending by master station as show in table 2-12.

Table 2-12

CAN	CANlink	Description
ID bit28~25	Arbitration logo	Command frame Arbitration logo 1000
ID bit24	Q&A mark	Q&A mark，“1”Q frame
ID bit23~16	Command code	Reading register command“0x04”
ID bit15~8	Target address	CANlink target station address
ID bit7~0	Source address	CANlink Site address
DATA1	Data	0
DATA2	Data	0
DATA3	Address	Reading address high byte
DATA4	Address	Reading address low byte

The response data of CANlink slave station shows as table 2-12 when reading operation successful. It returns command code “0x04”. The address as same as sending and the data is the value of reading.

Reading operation failure: When command code wrong, it returns command code “0xFF”. It returns address value“address+1” and invalid data invalid when wrong reading address.

Table 2-13

CAN	CANlink	Description
ID bit28~25	Arbitration logo	Command frame Arbitration logo 1000
ID bit24	Q&A mark	Q&A mark，“0”A frame
ID bit23~16	Command code	Writing register command“0x04”
ID bit15~8	Target address	CANlink Target station address
ID bit7~0	Source address	CANlink Site address
DATA1	Data	Reading data high byte
DATA2	Data	Reading data low byte
DATA3	Address	Reading address high byte
DATA4	Address	Reading address low byte

CANlink master station address is“0x01”, the slave station address is “0x02”.

Reading command code“F00.02”, Master station send CANlink message as below:

Message identification (Hex)	Data length	Data (Hex)
0x11040201	4	00 00 00 02

The frequency Drive response to CANlink message as below: Function code F00.02 value is “0x0002”, It means that the command source is communication channel.

Message identification (Hex)	Data length	Data (Hex)

0x10040102	4	00 02 00 02

The master station send message to write F00.02 as below:

Message identification (Hex)	Data length	Data (Hex)
0x11050201	4	00 00 00 02

The frequency Drive response to CANlink message and change F00.02 value to "0".The current command source is keypad channel.

Message identification (Hex)	Data length	Data（Hex）
0x10050102	4	00 00 00 02

2.3.2.3 Control command and status word communication address

EN600:

Variable name	Communication address	Property	The definition of command data and response
Operational Command	1E00H	Read and Write	1: Reserved 2: Reserved 3: Forward jog running 4: Reverse jog running 5: Run 6: Stop 7: Forward running 8: Reverse running 9: Fault reset 10: Reserved
Serial port value setting	1E01H	Read and Write	0~10000 (0 is the max value)
Drive Status	1E02H	Read Only	BIT0: Bus voltage set up BIT1: Normal running command is valid BIT2: Jog running command is valid BIT3: Running BIT4: The current running direction is reverse BIT5: The direction of operation command is reverse BIT6: Decelerating and Braking BIT7: Accelerating BIT8: Decelerating BIT9: Alarm BIT10: Fault BIT11: Current limit

			BIT12: Fault self-recovery BIT13: Self-tuning BIT14: Free Stop Status BIT15: Speed tracking start up
Alarm Code	1E03H	Read Only	0: No Alarm 1~50: The current alarm code

EN650B/EN655:

Variable name	Communication address	Property	The definition of command data and response
Operational Command	0x2000	Write Only	1: Forward running 2: Reverse running 3: Forward jog running 4: Reverse jog running 5: Free Stop Status 6: Decelerate to stop 7: Fault reset 8~10: Reserved
Serial port value setting	0x2001	Write Only	-10000~10000 (10000 is the max frequency)
Drive Status	0x3000	Read Only	1: Forward running 2: Reverse running 3: Stop
Alarm Code	0x8000	Read Only	0: No Alarm 1~60: The Current Alarm Code

2.3.2.4 Monitor parameter communication address

Parameter	Name	Communication address (Read only)
C-00	Monitor parameter 1	1C00H
C-01	Monitor parameter 2	1C01H
C-02	Monitor parameter 3	1C02H
C-03	Monitor parameter 4	1C03H
C-04	Monitor parameter 5	1C04H
C-05	Monitor parameter 6	1C05H

2.3.2.5 Internal hidden parameters

Variable name	Address	Read-write attribute	Command data or response value
Reserved	1D00H	/	
Reserved	1D01H	/	
Communication AO1 setup value	1D02H	R/W	Range: 0~4000

Communication AO2 setup value	1D03H	R/W	Range: 0~4000
Communication EAO1 setup value	1D04H	R/W	Range: 0~4000
Communication EAO2 setup value	1D05H	R/W	Range: 0~4000
Communication DO setup value	1D06H	R/W	Range: 0~4000
Communication EDO setup value	1D07H	R/W	Range: 0~4000
The communication output terminal given value	1D08H	R/W	BIT0: Y1 BIT1: Y2 BIT2: Y3 BIT3: Y4 BIT4: RLY BIT5: EY1 BIT6: EY2 BIT7: EY3 BIT8: EY4 BIT9: ERLY1 BIT10: ERLY2
The communication virtual input terminal given value	1D09H	R/W	BIT0: CX1 … BIT7: CX8
Reserved	1D0AH	/	
Reserved	1D0BH	/	
Reserved	1D0CH	/	
Reserved	1D0DH	/	

For example: When the slave station address is 5 and the master station address is 20, then setup the drive JOG forward running, the master station will send message as below:

Message identification (Hex)	Data length	Data (Hex)
0x11050514	4	00 03 1E 00

Correct response value from slave station:

Message identification (Hex)	Data length	Data (Hex)
0x10051405	4	00 03 1E 00

Wrong response from slave station:

Message identification (Hex)	Data length	Data (Hex)
0x10FF1405	4	00 04 1F 01

3 PROFIBUS-DP BUS

3.1 Model selection of PROFIBUS-DP extension card:

Serial No.	Type	Description	Remark
1	EN-PRO1	PROFIBUS-DP extension card (Used for 15KW and below)	Optional
2	EN-PRO2	PROFIBUS-DP extension card (Used for 18.5KW and above)	Optional
3	EN-PRPG01	PROFIBUS-DP and OC input PG integration extension card (Used for 5.5KW and above)	Optional

3.2 The outline and terminal definition of PROFIBUS-DP

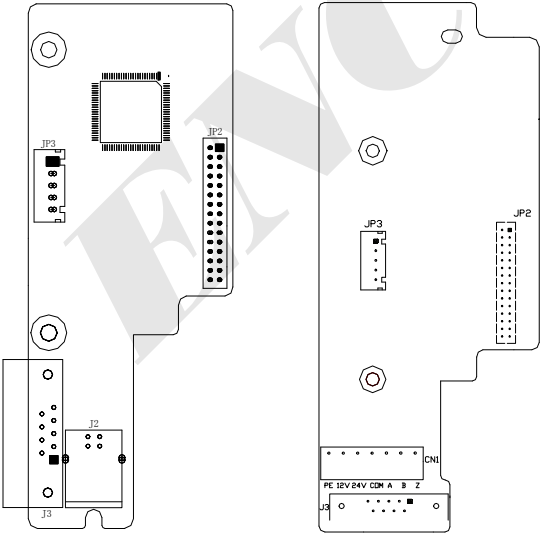

Fig.a EN-PRO1. EN-PRO2 **Fig.b EN-PRPG01**

Fig.3-1 Outline dimensional drawing

Table 3-1 Terminal function description

Terminal code	Name	Description	Remark
J2	USB adapter plug	Connect the factory adapter cable which turn the USB to DP9 D joint	Used for EN-PR01
J3	DP9 D joint	Communication signal connection interface, 9-pin DP9 female head	Used for EN-PR02. EN-PRPG01
JP2	Board-class docking socket	Docking the plug with CN2 of the control board while installation	
JP3	Program download interface	Used by manufacturer	
CN1	User interface	Used for connecting encoder	Used for EN-PRPG01

(1) J3 Plug pin definition:

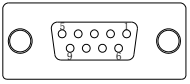

PIN data	Definition	PIN data	Definition
1	Bit bare	6	Power supply VCC
2	Bit bare	7	Bit bare
3	Communication signal A	8	Communication signal B
4	Bit bare	9	Bit bare
5	GND	-	-

(2) J2 Plug pin definition:

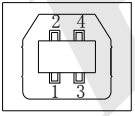

PIN data	Definition	PIN data	Definition
1	Communication signal A	3	GND
2	Communication signal B	4	Power supply VCC

(3) J2 Switch wire

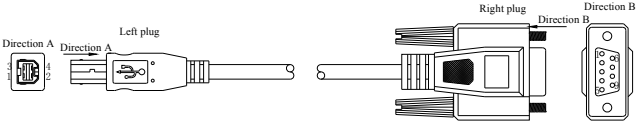

Table 3-2 The PIN correspondence between left-hand plug and right-hand plug

Left-hand plug PIN data	Right-hand plug PIN data	Left-hand plug PIN data	Right-hand plug PIN data
-	1	4	6
-	2	-	7
1	3	2	8
-	4	-	9
3	5	-	-

(4) CN1 Terminal definition

PIN data	Terminal mark	Description
1	PE	Shield terminal
2	12V	Provide external voltage of 12V(Only supply to 12V encoder)
3	24V	Provide external voltage and current of 24V/100mA
4	COM	GND
5	A	Encoder output signal A
6	B	Encoder output signal B
7	Z	Encoder output signal Z

3.3 PROFIBUS-DP communication junctions

PROFIBUS-DP communication cable was made of twisted-pair, both ends of twisted-pair connect a DP9 trunk splice which is specialized for PROFIBUS trunk, as shown in Fig.3-2, customer could buy DP9 and twisted-pair from Siemens distributors by themselves. The internal circuit is shown as Fig.3-3.

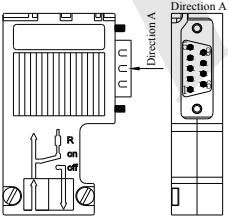

Fig.3-3 DP9 Outside drawing of trunk splice

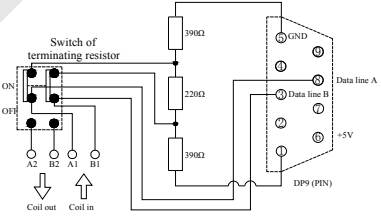

Fig.3-4 DP9 Interior circuit

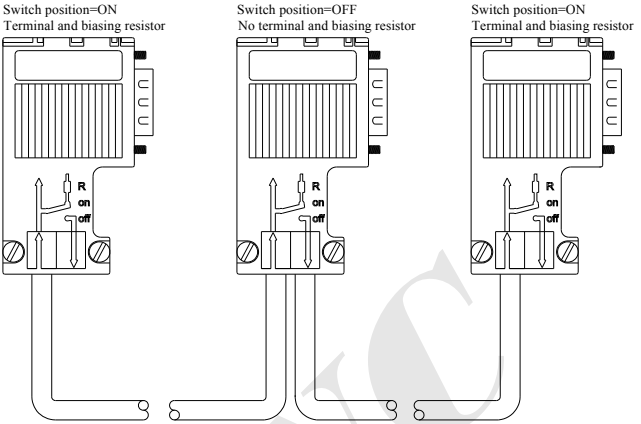

Fig.3-5 PROFIBUS-DP Communication junction diagram

3.4 PROFIBUS-DP Technical index of communication card

(1) PROFIBUS-DP communication card supports external communication baud rate as following:

9.6Kbps
19.2Kbps
45.45Kbps
93.75Kbps
187.5Kbps
500Kbps
1.5Mbps
3Mbps
6Mbps
12Mbps

(2) Support data package type PPO1, PP02, PP03, PP05 of PROFIDRIVE.

(3) Support the read-write and monitoring for Drive parameters.

Support the sub-protocol DPVO of PROFIBUS-DP protocol.

According to the difference of master station communication baud rate setting, there are requirements about the length of DP card and PROFIBUS-DP master station communication wire, they must be strictly required according to connection standard of

SIEMENS-DB9 to limit the communication data wire length, the requirements of baud rate and wire length are shown as following:

Transfer baud rate Kbps	Max length of wire (m)
9.6	1200
19.2	1200
187.5	600
500	200
1500	100
6000	100
12000	100

3.5 Type setting of Drive communication card

Function code	Name	Setting range	Min. unit	Factory Default	Alteration
F05.00	Protocol selection	0: Modbus protocol 1: Reserved 2: Profibus-DP protocol (Extension effective) 3: CANLink protocol (Extension effective) 4: CANopen protocol (Extension effective) 5: Freedom protocol 1 (Can modify all function parameters of EN500/EN600) 6: Freedom protocol 2 (Can only modify part of functions parameter of EN500/EN600) Remark: Expansion card is needed if select protocol 2. 3. 4	1	2	×
F05.02	Data format	Units digit: Freedom protocol and Modbus protocol data format 0: 1-8-1 format, no checkout, RTU 1: 1-8-1 format, even checkout, RTU 2: 1-8-1 format, odd checkout, RTU 3: 1-7-1 format, no checkout, ASCII 4: 1-7-1 format, even checkout, ASCII 5: 1-7-1 format, odd checkout, ASCII Tens digit: Profibus_DP protocol data format 0: PPO1 Communication format		00	×

		1: PPO2 Communication format 2: PPO3 Communication format 3: PPO5 Communication format			
F05.03	Local address	1~125	1	1	×
F17.00	Profibus Version	-	-	-	○
F17.01	Writing the PZD2 proportional coefficient	0.1%~6553.5%	0.1%	100.0 %	○
F17.02	Reading the PZD2 proportional coefficient	0.1%~6553.5%	0.1%	100.0 %	○
F17.03	Writing the symbols for PZD1~PZD10	0~65535	1	0	○
F17.04	Reading the symbols for PZD1~PZD10	0~65535	1	0	○

Communication timeouts:

Function code	Name	Setting range	Setting value
F05.04	Communication overtime detection time	0.0~1000.0s	0.0s
F05.05	Communication error detection time	0.0~1000.0s	0.0s

F17.01	Writing the PZD2 proportional coefficient	0.1%~6553.5%	100.0%

The parameter **[F17.01]** is only valid when non-EN500/EN600 Format is selected in the hardware configuration. Scale the PZD2 (which is sent to Drive by PLC) and the **[F17.01]** by specified scale factor, and save the scale value into the Drive. **[F17.03]** is used to set the sign bit of PZD2 (which is sent to Drive by PLC). When it is 2, the value is negative, otherwise it is positive. (According to the computer principle, the signed number in the PLC is save as the complement format. For example, the internal storage value of (16-bit signed number) -10 is 65526. The sign of 65526 in PZD is determined by **[F17.03]**. **[F17.03=2]**, then PZD=-10, otherwise PZD=65526)

F17.02	Reading the PZD2 proportional coefficient	0.1%~6553.5%	100.0%

Scale the PZD2 (which is sent to PLC) and the **[F17.02]** by specified scale factor, then sent the scale value to PLC by the Drive. **[F17.04]** is used to set the sign bit of PZD2 (which is sent to PLC by Drive). When **[F17.04]** is 2, the value is negative, otherwise it is positive. (According to the computer principle, the signed number in the Drive is save as the complement format. For example, the internal storage value of (16-bit signed number) -10 is

65526. The sign of 65526 in PZD is determined by [F17.04]. [F17.04=1], then PZD=-10, otherwise PZD=65526)

F17.03	Writing the symbol of PZD2	0~65535	0

When **[F17.03=2]**, the value is the signed number which is sent to Drive by PLC, otherwise it is the unsigned number. This parameter is valid only when the PLC hardware configuration is selected by non-EN500/EN600 Format.

F17.04	Reading the symbol of PZD2	0~65535	0

When **[F17.04=2]**, the value is the signed number which is sent to PLC by Drive, otherwise it is the unsigned number. This parameter is valid only when the PLC hardware configuration is selected by non-EN500/EN600 Format.

Note

Setting steps of PROFIBUS-DP Communication parameters of communication card:
(1) Modify F05.02 select PROFIBUS-DP protocol data forma;
(2) Modify F05.03, set slave address, slave address range is 1~125;
(3) Modify F05.00, Select 2 as the protocol type;
(4) Power down storage of Drive;
(5) After the poer on again, communication parameter setting gets effective
Remark: Please strictly obey above sequence to modify communication parameters

3.6 Data transmission format

Using type PPO as the data transmission format for PROFIDRIVE protocol (Variable transmission), type PPO contains PPO1, PPO2, PPO3, PPO4, PPO5, currently ENC PROFIBUS-DP Communication card supports PPO1, PPO2, PPO3, PPO5.

Data type	Supporting functions	Data type	Supporting functions
PPO1	①Single function parameter operation ②Drive command. frequency control ③ Drive status, running frequency reading	PPO3	①Drive command. frequency control ②Drive status, running frequency reading
PPO2	①Single function parameter operation ②Drive command. frequency control ③Drive status, running frequency reading ④4 functional parameters are written periodically ⑤4 functional parameters are read periodically	PPO5	①Single function parameter operation ②Drive command. frequency control ③Drive status, running frequency reading ④8 functional parameters are written periodically ⑤8 functional parameters are read periodically

PPO4	①Drive command. frequency control ②Drive status, running frequency reading ③4 functional parameters are written periodically ④4 functional parameters are read periodically		

PROFIBUS-DP card supports PPO1, PPO2, PPO3, PPO5 of PROFIDRIVE protocol. PPO data format contains two regions of data block, region PKW (Parameter region) and region PZD (Process data region).

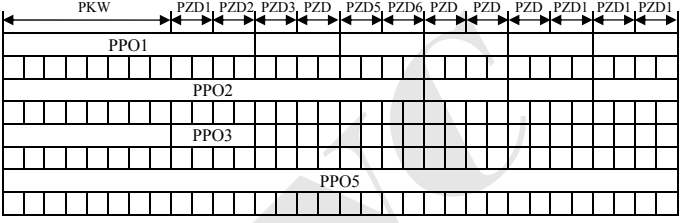

3.7 Data description of region PKW

Data of region PKW contains 3 groups of array, they are PKE.IND.PWE, the data byte length of PKE are 2 bytes, IND are 2 bytes, PWE are 2 bytes, following is the data format.

Master station sending data PKW							
Command code		Function address		Reserve		Write operation: parameter value Read operation: no	
PKE	PKE	IND	IND	PWE	PWE	PWE	PWE
Drive response data PKW							
Command code		Function address		Reserve		Success: Returned value Failure: wrong information	
PKE	PKE	IND	IND	PWE	PWE	PWE	PWE

3.7.1 Data description:

Description of master station sending data PKW		Description of Drive response data PKW	
PKE	High 4 bits: Command code 0: No request 1: Read function code parameter data 2: Write function code parameter data Low 4 bits: Reserve Low 8 bits: Function code parameter address high order	PKE	High 4 bits: Response code 0: No request 1: Correct operation of function code parameter 7: Cannot execute Low 8 bits: Function code parameter address high order
IND	High 8 bits: Function code parameter address low order Low 8 bits: Reserve	IND	High 8 bits: Function code parameter address low order Low 8 bits: Reserve
PWE	High 16 bits: Reserve Low 16 bits: No use for reading request，parameter value for writing request	PWE	Request succeed: parameter value Request fail: Error code 2: Command code illegal 3:Visitorial register address illegal 4: Write the value error of register 5: Reserve 6: Read overtime 7: Write overtime

3.7.2 Address range

F00.00~F00.27----------0x0000~0x001B
F01.00~F01.29----------0x0100~0x011D
F02.00~F02.26----------0x0200~0x021A
F03.00~F03.12----------0x0300~0x030C
F04.00~F04.43----------0x0400~0x042B
F05.00~F05.39----------0x0500~0x0527
F06.00~F06.21----------0x0600~0x0615
F07.00~F07.17----------0x0700~0x0711
F08.00~F08.31----------0x0800~0x081F
F09.00~F09.50----------0x0900~0x0932

.
.
.
.
.
.

F26.00~F26.17----------0x1A00~0x1A11

3.7.3 Application examples

The sending data PKW region from Drive function parameter F01.01 and Drive response data PKW region read by master station are shown as below:

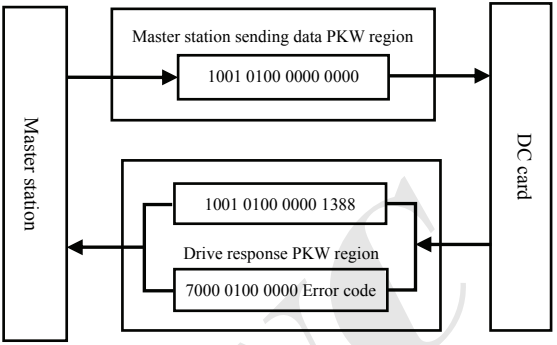

The sending data PKW region from Drive function parameter F01.01 and Drive response data PKW region modified by master station are shown as below:

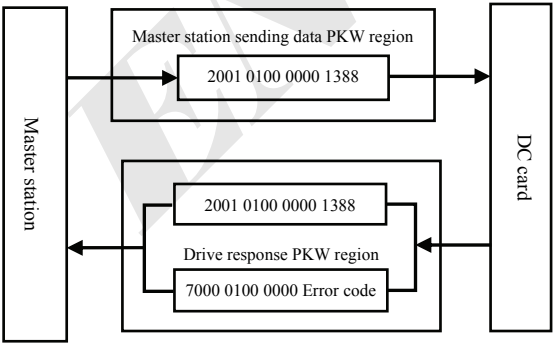

3.8 PZD Region data description

The data of Region PZD help master station real-timely change and read the Drive data, also include the periodic data interaction between them, the data communication address is directly configured by Drive, mostly contains following content

(1) Control command of Drive. real-time set of target frequency.

Description of master station sending data PZD		
Drive command	Drive target frequency	Real-time modification of Drive function parameter
PZD1	PZD2	PZD3~PZD12
Region PZD of Drive response data		
Drive command	Drive running frequency	Real-time read of Drive function parameter
PZD1	PZD2	PZD3~PZD12

(2) Current status of Drive. real-time read of running frequency.

Data of function parameter. monitoring parameter can real-timely interact between Drive and PROFIBUS master station, PZD process data mostly achieve periodic data interaction between master station and Drive.

Note

(1) The reading and writing addresses of PZD1 and PZD2 must be set correctly.
(2) For ABB, Siemens, and Schneider formats, F17.03/F17.04 must be set to 2.
(3) For EN655/EN650B series, the reading address of PZD2 is 0x7000; In the other three formats, the reading address of PZD2 is 0x703C.

3.8.1 Master station sends the data description

EN600

Master station sends description of data PZD	
PZD1	3: Forward jog running 4: Reverse jog turning 5: Running 6: Stop 7: Forward running 8: Reverse running 9: Fault resetting
PZD2	Target frequency of Drive
PZD3~PZD10	Real-timely change the functional parameter value, the address of written functional parameter is set by PLC hardware configuration .

EN650B/EN655

Master station sends description of data PZD

PZD1	1: Forward running 2: Reverse running 3: Forward jog running 4: Reverse jog turning 5: Free Stop 6: Decelerate to stop 7: Fault resetting
PZD2	Target frequency of Drive
PZD3~PZD10	Real-timely change the functional parameter value, the address of written functional parameter is set by PLC hardware configuration .

3.8.2 Response data description of Drive

EN600

Master station sends description of data PZD	
PZD1	BIT0: Set up busbar voltage BIT1: Normal running command effective BIT2: Jog running command effective BIT3: Running BIT4: Current running direction is reverse BIT5: Running command direction is reverse BIT6: Deceleration braking BIT7: Acceleration BIT8: Deceleration BIT9: Alarm BIT10: Fault BIT11: Current limit BIT12: Fault self-recovering BIT13: Auto-tunning BIT14: Free halt mode BIT15: Speed tracking start
PZD2	Drive running frequency
PZD3~PZD10	Real-timely change the functional parameter value, the address of written functional parameter is set by PLC hardware configuration .

EN650B/EN655

Master station sends description of data PZD	
PZD1	1: Forward running 2: Reverse running 3: Stop
PZD2	Running frequency of Drive
PZD3~PZD10	Real-timely change the functional parameter value, the address of written functional parameter is set by PLC hardware configuration .

3.9 Parameter Address

Parameter	Decimal Address	Hexadecimal Address	Parameter	Decimal Address	Hexadecimal Address
F00.00	0	0x0000	F01.00	256	0x0100
…	…	…	…	…	…
F00.27	27	0x001B	F01.29	285	0x012D
F02.00	512	0x200	F03.00	768	0x300
…	…	…	…	…	…
F02.26	538	0x21A	F03.13	781	0x30D
F04.00	1024	0x400	F05.00	1280	0x500
…	…	…	…	…	…
F04.43	1067	0x42B	F05.39	1319	0x527
F06.00	1536	0x600	F07.00	1792	0x700
…	…	…	…	…	…
F06.21	1557	0x615	F07.17	1809	0x711
F08.00	2048	0x800	F09.00	2304	0x900
…	…	…	…	…	…
F08.31	2079	0x81F	F09.50	2354	0x932
F10.00	2560	0x0A00	F11.00	2816	0x0B00
…	…	…	…	…	…
F10.45	2605	0x0A2D	F11.29	2845	0x0B1D
F12.00	3072	0x0C00	F13.00	3328	0x0D00
…	…	…	…	…	…
F12.14	3086	0x0C0E	F13.14	3342	0x0D0E
F14.00	5120	0x0E00	F15.00	3840	0x0F00
…	…	…	…	…	…
F14.30	3606	0x0E1E	F15.22	3862	0x0F16
F16.00	4096	0x1000	F17.00	4352	0x1100
…	…	…	…	…	…
F16.13	4109	0x100D	F17.20	4372	0x1114
F18.00	4608	0x1200	F19.00	4864	0x1300
…	…	…	…	…	…
F18.24	4632	0x1218	F19.44	4908	0x132C
F20.00	5120	0x1400	F21.00	5376	0x1500
…	…	…	…	…	…
F20.22	5142	0x1416	F21.21	5397	0x1515
F22.00	5632	0x1600	F22.16	5648	0x1610
…	…	…	…	…	…
F22.17	5649	0x1611	F23.17	5905	0x1711
F24.00	6144	0x1800	F25.00	6400	0x1900
…	…	…	…	…	…
F24.12	6156	0x180C	F25.29	6429	0x191D

F26.00	6656	0x1A00			
…	…	…			
F26.17	6673	0x1A11			

Note

For EN655/EN650B, the communication address 0x0000~0x1A11 are operated in EEPROM, and 0xA000~0xBA11 are operated in RAM. The user can choose to read/write data in RAM or read/write data in EEPROM. It should be noted that when the data is written in RAM, if the Drive power-off at the moment, the parameters will not be saved.

EN600:

Operational Command	12288	0x3000			
Serial port value setting	12289	0x3001	Drive Status	12290	0x3002
Alarm Code	12291	0x3003	C-00	12292	0x3004
C-01	12293	0x3005	C-02	12294	0x3006
C-03	12295	0x3007	C-04	12296	0x3008
C-05	12297	0x3009	PID Communication Index Value	12298	0x300A
Torque Communication Index Value	12299	0x300B	Communication AO1 Index Value	12300	0x300C
Communication AO2 Index Value	12301	0x300D	Communication EAO1 Index Value	12302	0x300E
Communication EAO2 Index Value	12303	0x300F	Communication DO Index Value	12304	0x3010
Communication EDO Index Value	12305	0x3011	Communication Output Terminal Index Value	12306	0x3012
Communication Virtual Input Index Value	12307	0x3013	Limit frequency for Forward torque	12308	0x3014
Limit frequency for Reverse torque	12309	0x3015	PID Voltage Feedback	12310	0x3016

EN650B/EN655:

Operational Command	12288	0x3000			
Serial port value setting	12289	0x3001	Drive Status	12290	0x3002
Alarm Code	12291	0x3003	Communication DO Index Value	12292	0x3004
Communication AO1 Index Value	12293	0x3005	Communication AO2 Index Value	12294	0x3006
Communication HDO Index Value	12295	0x3007			
Monitoring parameter 0	28672	0x7000			
…	…	…			
Monitoring parameter 78	28750	0x704E			

3.9.1 Control command and status word communication address

EN600

Variable name	Communication address	Property	The definition of command data and response
Operational Command	0x3000	Read and Write	1: Reserved 2: Jog stopping command 3: Forward jog running 4: Reverse jog running 5: Run 6: Stop 7: Forward running 8: Reverse running 9: Fault reset 10: Reserved
Serial port value setting	0x3001	Read and Write	When the hundreds place of F01.02 is 0, 5000 means 50.00Hz; When the hundreds place of F01.02 is 1, 10000 means F01.11;
Drive Status	0x3002	Read Only	BIT0: Bus voltage set up BIT1: Normal running command is valid BIT2: Jog running command is valid BIT3: Running BIT4: The current running direction is reverse BIT5: The direction of operation command is reverse BIT6: Decelerating and Braking BIT7: Accelerating BIT8: Decelerating BIT9: Alarm BIT10: Fault BIT11: Current limit BIT12: Fault self-recovery BIT13: Self-tuning BIT14: Free Stop Status BIT15: Speed tracking start up
Alarm Code	0x3003	Read Only	0:No Alarm 1~50:The current alarm code

EN650B/EN655:

Variable name	Communication address	Property	The definition of command data and response

Operational Command	0x3000	Read and Write	1: Forward running 2: Reverse running 3: Forward jog running 4: Reverse jog running 5: Free Stop Status 6: Decelerate to stop 7: Fault reset 8~10: Reserved
Serial port value setting	0x3001	Write Only	-10000~10000 (10000 is the max frequency)
Drive Status	0x3002	Read Only	1: Forward running 2: Reverse running 3: Stop
Alarm Code	0x3003	Read Only	0: No Alarm 1~60: The Current Alarm Code

3.9.2 Monitor parameter communication address and internal hidden parameter communication address

EN600

Variable name	Communication address	Property	The definition of command data and response
C-00	0x3004	Read Only	Monitoring parameter1
C-01	0x3005	Read Only	Monitoring parameter2
C-02	0x3006	Read Only	Monitoring parameter3
C-03	0x3007	Read Only	Monitoring parameter4
C-04	0x3008	Read Only	Monitoring parameter5
C-05	0x3009	Read Only	Monitoring parameter6
PID Communication Index Value	0x300A	Read and Write	Range:0~1000 (1000 means 10.00V)
Torque Communication Index Value	0x300B	Read and Write	Range:0~2000 (2000 means 200.0% Rated torque)
Communication AO1 Index Value	0x300C	Read and Write	Range:0~4000 (4000 means 10.00V or 20.00mA)
Communication AO2 Index Value	0x300D	Read and Write	Range:0~4000 (4000 means 10.00V or 20.00mA)
Communication EAO1 Index Value	0x300E	Read and Write	Range:0~4000 (4000 means 10.00V or 20.00mA)
Communication EAO2 Index Value	0x300F	Read and Write	Range:0~4000 (4000 means 10.00V or 20.00mA)
Communication DO Index Value	0x3010	Read and Write	Range:0~4000 (4000 means 10.00V or 20.00mA)

Communication EDO Index Value	0x3011	Read and Write	Range:0~4000 (4000 means 10.00V or 20.00mA)
Communication Output Terminal Index Value	0x3012	Read and Write	BIT0:Y1 BIT1:Y2 BIT2:Y3 BIT3: Y4 BIT4: RLY1 BIT5: EY1 BIT6: EY2 BIT7: EY3 BIT8: EY4 BIT9: ERLY1 BIT10: ERLY2
Communication Virtual Input Index Value	0x3013	Read and Write	BITO:CX1 … BIT7:CX8
Limit frequency for Forward torque	0x3014	Read and Write	Range:0~60000 (60000 means 600.00Hz)
Limit frequency for Reverse torque	0x3015	Read and Write	Range:0~60000 (60000 means 600.00Hz)
PID Voltage Feedback	0x3016	Read and Write	Range:0~4000 (4000 means 600.00Hz)
Reserved		/	

EN650B/EN655:

Variable name	Communication address	Property	The definition of command data and response
Communication DO Index Value	0x3004	Write Only	BIT0: DO1 BIT1: DO2 BIT2: DO3 BIT3: DO4 BIT4: REL (Relay)
Communication AO1 Index Value	0x3005	Write Only	0x0000~0x7FFF: 0%~100%
Communication AO2 Index Value	0x3006	Write Only	0x0000~0x7FFF: 0%~100%
Communication HDO Index Value	0x3007	Write Only	0x0000~0x7FFF: 0%~100%
Monitoring parameter 0	0x7000	Read Only	Running Frequency (Hz)
…	…	…	…
Monitoring parameter 78	0x704E	Read Only	Reserved

3.10 How to use PROFIBUS-DP card to connect the master station

(1) Access the PROFIBUS-DP communication card to the Drive control board, light LED3 means correct card connection

(2) Connect the communication card with the master station by the standard DP9 splice，through the Drive keyboard, select protocol type by F05.02, set communication card address by F05.03, and finally enable PROFIBUS protocol by setting F05.00=2.

(3) Master station loads EN500PFS.GSD, after configuring slave station, LED4 lights, shows that the communication between master station and communication card is successful.

(4) Master station operates the communication card, LED1 lights or flickers, shows that the communication between communication card and control board is normal.

3.10.1 GSD configuration steps of EN600 PROFIBUS-DP in the S7-300 master station:

The user must configure the GSD documents of slave station first while they are using the PROFIBUS master station，and add the corresponding slave station devices into master station system. GSD documents could be got form the supplier or factory. For example, the configured steps of EN600DP2.GSD show as below:

(1) Establish a project on STEP7,add the master station of S7-300, as shown in Fig.3-6.

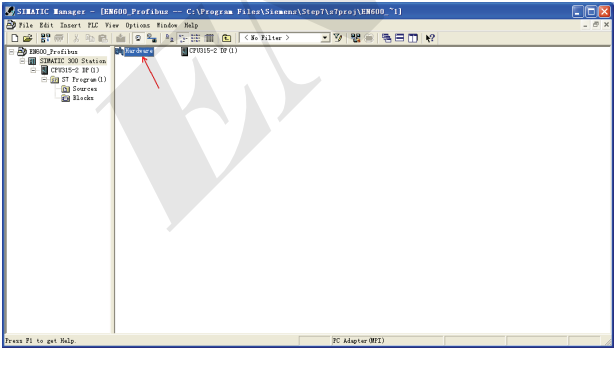

Fig 3-6

(2) Select "hardware", double-click and enter the hardware configuration

(3) Install the EN600DP2.GSD file. As shown in the Fig.3-7.

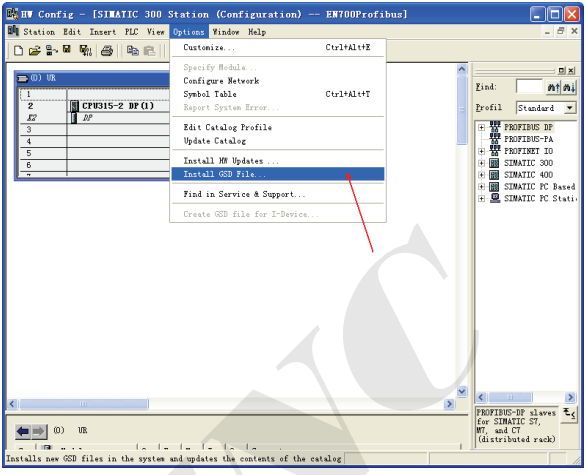

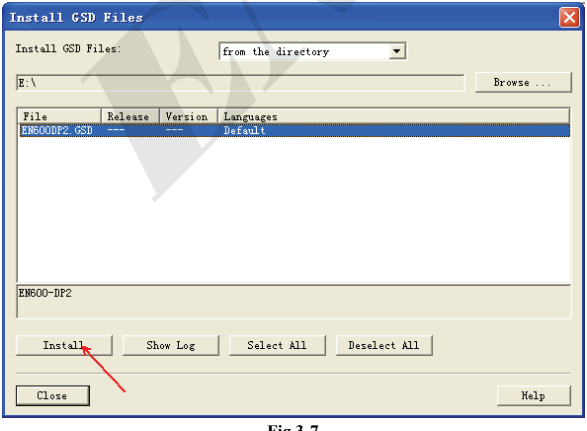

Fig.3-7

(4) After complete the installation of EN600DP2.GSD successfully, you can see EN600 DP related information in the "Catalog" on the left side. As shown in Fig.3-8:

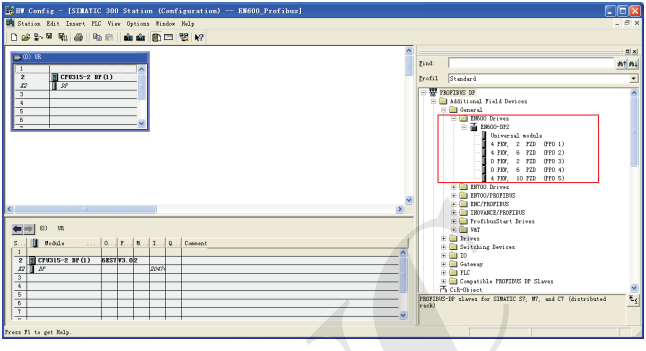

Fig.3-8

(5) Configure the communication parameters, double click the icon which is marked by the red arrow, as shown in Fig.3-9.

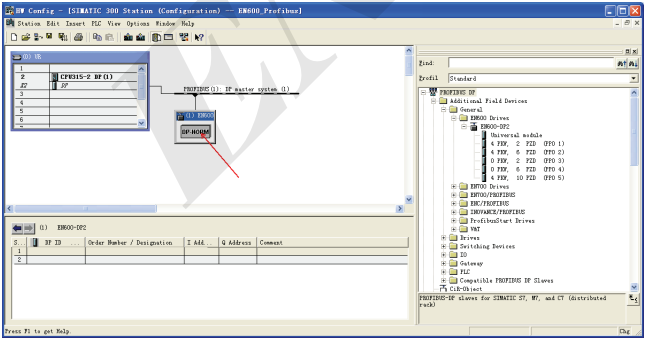

Fig.3-9

Click the “Parameter Assignment” option, configure the address of Drive communication parameter.

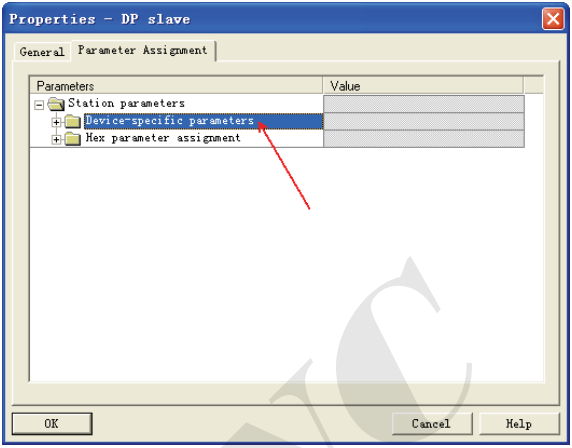

In default, Data Output 1 is the Drive control word address, Data Output 2 is the Drive frequency address setting, Data Input 1 is the Drive status word address, and Data Input 2 is the Drive return frequency.

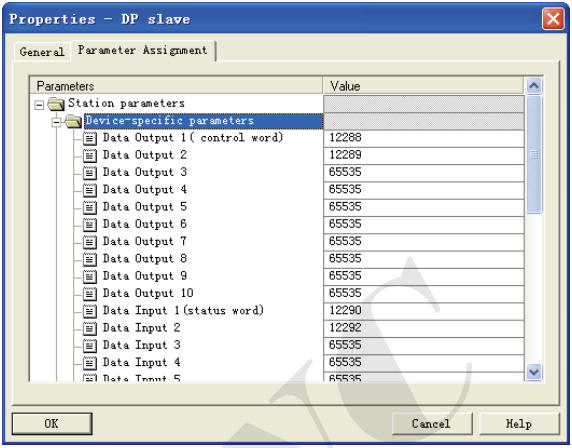

EN600 DP2 control word/status word supports 4 formats, which can be set by "Paramter Assignment".

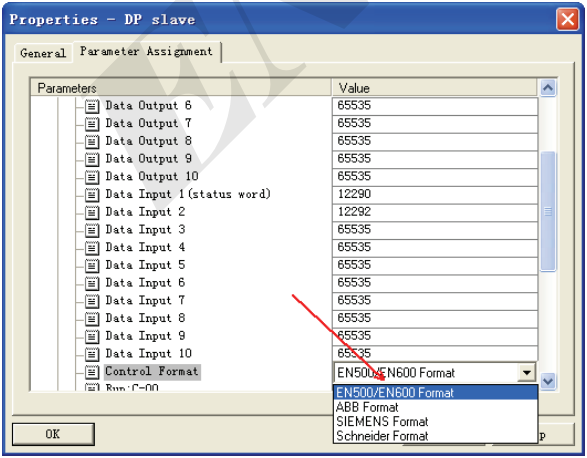

The four formats are EN500/EN600 Format, ABB Format, SIEMENS Format, Schneider Format. If you need to use EN600 to replace ABB Siemens Schneider-related Drives, please select the corresponding format.

(6) Assign the address of PPO in PLC 300. Take PPO3 as an example, the address of PPO is assigned by PLC automatically. As shown in Figure 3-10, I Address is from 256 to 259 and Q Address is from 256 to 259. It can be seen that the occupied address of Data Output 1 is 256 in the PLC (hexadecimal 0x100), the occupied address of Data Output 2 is 258 in the PLC (hexadecimal 0x102), and the occupied address of Data Input 1 is 256 in the PLC (hexadecimal 0x100), the occupied address of Data Input 2 is 258 in the PLC (hexadecimal 0x102),

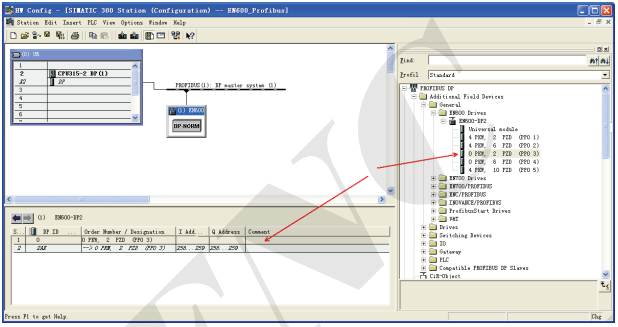

Fig.3-10

In PLC, when user is writing the address unit of 256 and 258, it can control the Drive running and set the Drive frequency; when user is reading the address unit of 256 and 258, it can get the running status and current frequency of the Drive. As shown in Fig.3-11, set the Drive to run forward at 50.00Hz, and go back to the current status and frequency of the Drive at the same time, the running status is stored in QW6, and the current frequency is stored in QW8.

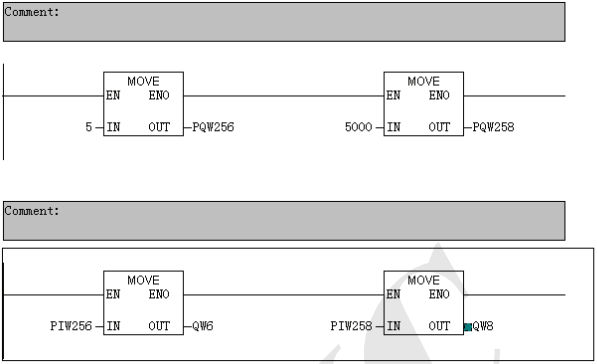

Fig.3-11

You can also use the system functions SFC15 to write in batches and use the SFC14 to read in batches from the Step7, it can control the drive running at one time, set the drive running frequency, read the current status and current running frequency of the drive.

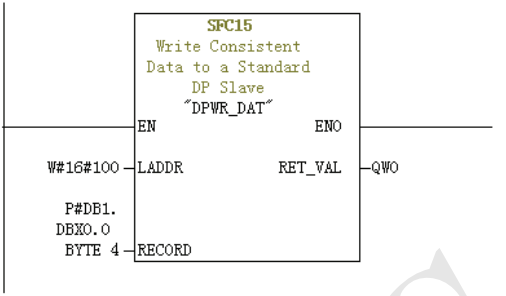
SFC15
Write Consistent
Data to a Standard
DP Slave
"DPWR_DAT"
EN
ENO
W#16#100
LADDR
RET_VAL
QW0
P#DB1.
DBX0.0
BYTE 4
RECORD

Comment:

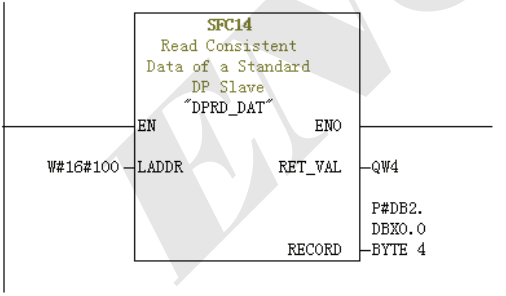
SFC14
Read Consistent
Data of a Standard
DP Slave
"DPRD_DAT"
EN
ENO
W#16#100
LADDR
RET_VAL
QW4
P#DB2.
DBX0.0
RECORD
BYTE 4

ENC Shenzhen Encom Electric Technologies CO., LTD.
Address: Floor 6, Building 2 West, Pingshan Minqi Science & Technology Park, Taoyuan Str., Nanshan District, Shenzhen, China
Website: www.encvfd.com
E-mail: encvfd@encvfd.com
encvfd@enc.net.cn
Tel: +86-755-26984485
Fax: +86-755-26985120